H0436
Monster Jam Grave Digger
12V Advanced Series

Age Range: 3 and up
Weight Limit: 130 lbs.
Surfaces: Grass/ Asphalt/Hard Surfaces
Speed: 2.5 Forward/Reverse
5.0 Forward
Colors: Black Body/Black Wheels
Intro: 2005
Suggested Retail: 299.99
Box Dimensions:
31.880 x 39.625 x 51.0
64 lbs.
Warranty One Year Vehicle
6 Months Battery

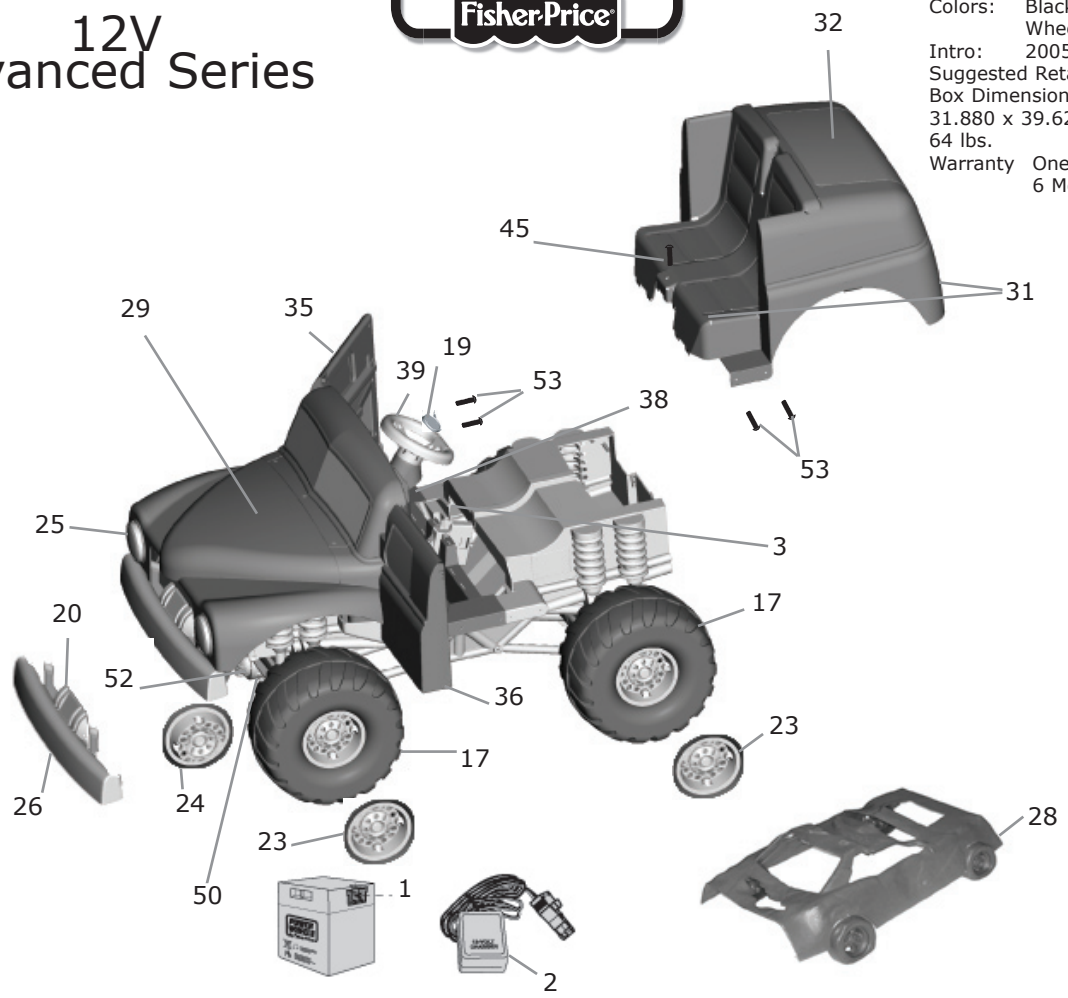

Rev. 10/18/06

Item No.	Description	Part No.	Qty.
Working / Electrical Parts			
1.	12V Battery	00801-0638	1
2.	12V Charger w/Probe	00801-0972	1
3.	Shifter Assy.	H0440-9159	1
Plastic / Other Parts			
15.	Body	N/A	
17.	Wheel (See parts not shown for front wheel info)	H0436-2219	4
19.	Steering Wheel Button	75597-2749	1
20.	Grill	H0436-0345	1
22.	Channel Cover	H0436-2209	1
23.	Hubcap	H0436-2269	4
24.	Inner Front Hubcap	H0436-2239	2
25.	**Headlight Lens**	**H0436-2469**	**2**
26.	Front Bumper	H0436-9459	1
28.	Crushable Car	H0436-2509	1
29.	Hood w/Label	H0436-9024	1
31.	Seat/Trunk w/Label	H0436-9076	1
32.	Trunk Lid w/Label	H0436-9088	1
35.	Door w/Label (Right)	H0436-9610	1
36.	Door w/Label(Left)	H0436-9630	1
38.	Dash w/Label	H0436-9650	1
39.	Steering Wheel (See parts not shown for steering wheel assembly)	G3740-2779	1

Item No.	Description	Part No.	Qty.
Hardware / Metal Parts			
45.	8 x 3/4 Screw	00912-8001	1
50.	Front Axle	H0436-4509	2
52.	Steering Linkage	H0436-9419	1
53.	8 x 1 Screw		12
Parts Not Shown			
	Hardware Bag	H0436-9269	1
	Owners Manual	H0436-0920	1
	Windshield Decal	H0436-0354	1
	Decal Sheet-Parts Bag (Except Windshield)	H0436-9019	1
	Footswitch (Plunger Type)	**00801-0933**	**1**
	Switch Control (Shift/Rock)	**00801-0923**	**1**
	Headlight Harness	**H0436-9529**	**1**
	Battery Life Indicator	H0436-9059	1
	Chassis Tie	H0436-2149	4
	Motor Gearbox Assy	**00968-2915**	**2**
	Gearbox W/out Motor	**00968-2807**	**2**
	Motor Pinion Assembly	**00968-2705**	**2**
	Main Harness Assy	**H0436-9799**	**1**

No. Qty.	Description	No.	
	Footboard Assy.	H0436-9209	1
	Steering Column	H0436-4429	1
	Headlight Bucket	**H0436-2479**	**2**
	Headlight Cap	**H0436-2489**	**2**
	7/16 Washer	0801-0196	6
	.437 Cap Nut	0801-0226	2
	.354 Cap Nut	0801-0604	1
	Rear Axle	H0436-4519	1
	Key Assembly	H0436-9279	1
	Soundbox	H0436-9559	1
	Inner Rear Hubcap (Driver)	H0436-2229	2
	Channel Cover	H0436-2209	1
	Gearbox Cover w/Screws	H0436-2139	1
	Axle Pin for Front Wheels (Used instead of cap nuts)	00801-1439	2
	.437 Cap Nut for Steering Wheel	0801-0226	1

N/A = Not Available

Bold and Underlined parts are to be purchased and installed by Service Centers only. These items may not be sold directly to consumers by Service Centers or Fisher-Price.